VERIFYING GAS CHROMATOGRAPHS AT CUSTODY TRANSFER LOCATIONS

Jamie Marsden

Rosemount Analytical
Emerson Automation Solutions
10241 West Little York, Suite 200
Houston, Texas 77040

INTRODUCTION

Verifying the correct operation and accuracy of the Gas Chromatograph (GC) is an integral part of a custody transfer metering system, and involves ensuring the accuracy of the analyzer at the time of testing, as well as confirming that the GC performed properly during the periods between validations and assessing the likelihood of continued proper functioning until the next validation.

Because the GC will be offline during much of a validation procedure, the validation should only be performed at a time when the composition of the gas flowing through the metering station is relatively stable.

Since periods of stable gas composition can be hard to predict, stations with Ultrasonic Meters can use the measured the speed of sound to compare the against the calculated speed of sound for the fixed composition. This will effectively monitor the validity of the fixed composition during the validation. If the variation in the speed of sound varies by more than 2%, the validation procedure should be halted, and the GC should be returned to service until the gas composition stabilizes.

The verification procedure for the GC can be completed in three stages:

1. Verify the operation of the GC for the previous period.
2. Verify the current accuracy of the GC.
3. Check for changes in operation that may affect future reliability.

VERIFYING THE OPERATION OF THE GC FOR THE PRECEEDING PERIOD

To verify that the GC has been operating correctly for the period prior to the verification test, download and analyze the chromatograph archives. Most GCs suitable for custody transfer applications store analysis data, event logs and alarm logs from the previous 34 days, minimum.

Download and check the following data:

- Un-Normalized Total Trend – Confirm that the un-normalized total for every analysis is between the accepted limits, which are typically 98% and 102%. Note that periods of extremely low un-normalized totals may line up with periods when the Meter Run was shut-in, and the sample pressure was very low.
- Alarm Logs – Confirm that any alarms that have occurred during the period were caused by known events such as power failures or scheduled maintenance. All alarms during the period should be investigated and the cause determined prior to verifying the accuracy of the GC.
- Event Logs – Confirm that any changes to the configuration were performed by qualified personnel during periods of scheduled maintenance and confirm that the changes have not affected the operation or calculations of the GC.

VERIFYING THE ACCURACY OF THE GC

To verify the current accuracy and performance of the GC, confirm that the As Found calibration is correct, and then observe the correct operation and repeatability of the GC.

Common practice in the industry to verify the accuracy of the GC has been to run an analysis of the calibration gas ("run the calibration gas as an unknown") and compare it to the certified analysis. However, as the GC is automatically calibrated to the same mixture, analyzing it will only confirm that the GC reads what it has been told to read. It does not identify issues with the analysis and will not confirm that it is analyzing the sample gas correctly. A better method is to use the understanding of how the GC detector responds to the components and confirming that the actual response matches the theoretical response to confirm the GC is analyzing correctly.

During a calibration cycle, the Response Factor, which is the response of the detector to each component, is calculated. The formula for the Response Factor[1] is:

---

[1] Applies to gas chromatographs manufactured by Emerson Process Management, and may not be true for all other brands of gas chromatographs.

$$R.F. = \frac{\text{Area}}{\text{Calibration Concentration}}$$

Where:

R.F.	=	The Response Factor for an individual component.
Area	=	The integrated area under the peak on the chromatogram. This is changed to Height when Peak Height calculation method is configured.
Calibration Concentration	=	The concentration of the individual concentration in the Calibration Gas, as defined on the Calibration Gas Bottle Certificate.

Gas chromatographs used for natural gas measurement typically utilize Thermal Conductivity Detectors (TCD) that produces an output dependant on the thermal conductivity of the gas passing across it. Since the thermal conductivity of a component is a constant physical property, and each component has a different thermal conductivity, the response of the detector to each component should follow a set pattern.

The TCD is typically two thermistors that change in resistance with a change in temperature. One thermistor (the "reference") has only the carrier gas passing over it, and the other thermistor (the "measure") has the output of the columns that will have the separated components and the carrier gas passing over it. The magnitude of the detector output is dependent on the difference in thermal conductivity of the gases passing over the reference and measure thermistors.

Of the components typically measured in natural gas GCs, methane has the thermal conductivity closest to helium (the carrier gas), and so produces the smallest amount of detector output for a given concentration. Nitrogen has the next closest thermal conductivity, and so will have a response factor larger than methane. If upon inspection it is found that the response factor for nitrogen is actually smaller than methane, you can deduce that there is an error in the measurement of either methane or nitrogen. The response factors for each component is given on the Final Calibration report (see Figure 1).

The order of the response factors for a GC utilizing a single detector, from smallest to largest, is:

1. Methane
2. Nitrogen
3. Carbon Dioxide
4. Ethane
5. Propane
6. iso-Butane
7. normal-Butane
8. neo-Pentane
9. iso-Pentane
10. normal-Pentane
11. C6+

If the magnitude of the response factors is not in this order, it indicates that there is calibration error from the gas chromatograph that must be rectified before the validation can be completed.

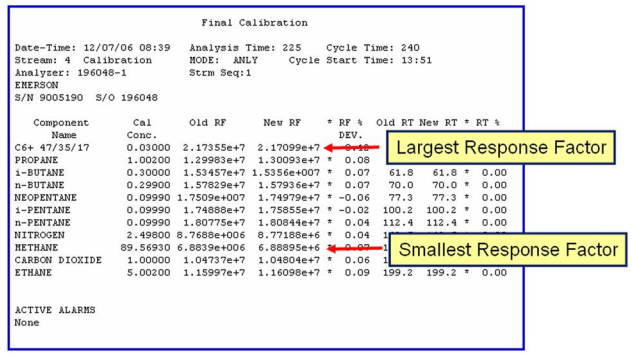

Final Calibration

Date-Time: 12/07/06 08:39 Analysis Time: 225 Cycle Time: 240
Stream: 4 Calibration MODE: ANLY Cycle Start Time: 13:51
Analyzer: 196048-1 Strm Seq:1
EMERSON
S/N 9005190 S/O 196048

Component Name	Cal Conc.	Old RF	New RF	* RF % DEV.	Old RT	New RT	* RT %
C6+ 47/35/17	0.03000	2.17355e+7	2.17099e+7	* 0.10			
PROPANE	1.00200	1.29983e+7	1.30093e+7	* 0.08			
i-BUTANE	0.30000	1.53457e+7	1.5356e+007	* 0.07	61.8	61.8	* 0.00
n-BUTANE	0.29900	1.57829e+7	1.57936e+7	* 0.07	70.0	70.0	* 0.00
NEOPENTANE	0.09990	1.7509e+007	1.74979e+7	* -0.06	77.3	77.3	* 0.00
i-PENTANE	0.09990	1.74888e+7	1.75855e+7	* -0.02	100.2	100.2	* 0.00
n-PENTANE	0.09990	1.80775e+7	1.80844e+7	* 0.04	112.4	112.4	* 0.00
NITROGEN	2.49800	8.7688e+006	8.77188e+6	* 0.04			
METHANE	89.56930	6.8839e+006	6.88895e+6	* 0.07			
CARBON DIOXIDE	1.00000	1.04737e+7	1.04804e+7	* 0.06			
ETHANE	5.00200	1.15997e+7	1.16098e+7	* 0.09	199.2	199.2	* 0.00

ACTIVE ALARMS
None

Figure 1 - A typical final calibration report with the smallest and largest response factors highlighted.

Once the existing calibration of the GC is confirmed to be accurate, then the next step is to run the GC through a calibration cycle:

1. Analyze the calibration gas as an unknown. Save the analysis report and the chromatogram.
2. Run a normal calibration. Save each calibration report.
3. Save the final calibration report and the final calibration chromatogram.
4. Analyze the calibration gas as an unknown.
5. Analyze the results.

The goal of this test is to confirm that the GC will calibrate correctly, and that the accuracy of the measurement will not change after the calibration. If any alarms are raised during the calibration cycle, the validation has failed.

Check the results of the analysis of the calibration gas before and after the calibration cycle for repeatability. The repeatability specifications for most gas chromatographs are ±0.25 BTU/scf per 1000 BTU (±0.025% of Heating Value) for an extended temperature range (0 to 140°F or -18 to 56°F).

The final calibration report should be checked for the following:

1. Response Factor order.
2. Response Factor deviation – The alarm limit is 10%, however, typically it is below 2%. If any component has a significantly larger deviation than the others, then further investigation is warranted.
3. Retention Time deviation – Most gas chromatographs for this application will track changes in the retention time of the peaks for each component. When a daily

calibration is performed, this deviation should be less than one second.

CHECK FOR CHANGES IN OPERATION THAT MAY AFFECT FUTURE RELIABILITY.

Once the above procedures have been completed, the GC operation for the period up to the verification test has been completed and the GC can be returned to service. The next step in verifying the GC is to check for changes that may affect the future reliability of the GC during the next period of service.

An estimated 80% of measurement issues with any gas chromatograph are due to long-term contamination of the analytical flow path. This results in a gradual increase in the retention times of the individual component peaks. As the retention times of the components increases, the analytical performance may begin to suffer. When the measured peaks drift, they may begin to be interfered with by the fixed timed events (refer Figure 2), and the valve timing (which is timed to occur between two components) may start to misdirect the components into the wrong columns or flow paths (refer Figure 3).

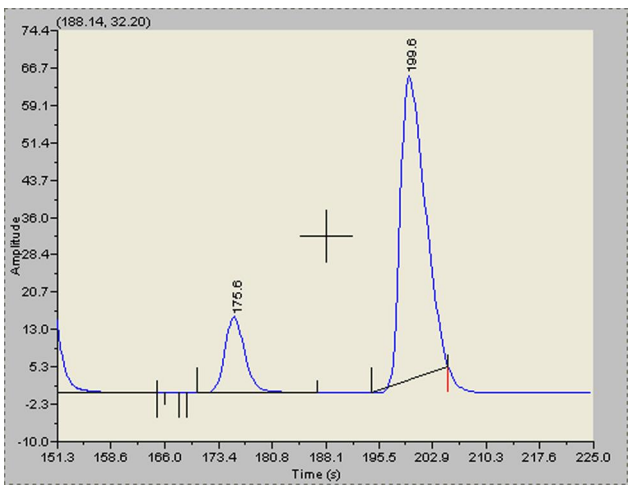

Figure 2 - Drifting of the retention times have caused the timed events (in this case, an Inhibit Off) to affect the measurement of the peak area.

Analyzing the current chromatogram in isolation will not highlight the potential for retention time drift to cause an issue in the next validation period. The current calibration chromatogram should be compared to the chromatogram from the last verification test to assess the amount of drift which has occurred during that period. This information can then be used to make a judgment on the likely amount of drift to occur during the next period.

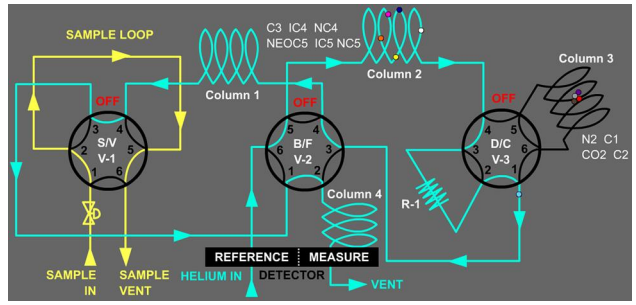

Figure 3 - Valve 3 timing will separate C2 and smaller components from the C3 and larger components. When the retention times increase while the valve timing stays fixed, not all of the C2 may make it into Column 3 before the valve switches.

In the example shown in Figure 4, it can be seen that there has been a shift in retention times by a maximum of 6 seconds. If this GC was to be left for the same amount of time without adjustment, there is a high likelihood that the normal-Pentane (the last peak) peak will start to be affected by the timed events. During the verification testing it should be assessed whether the GC should undergo planned maintenance during the next period.

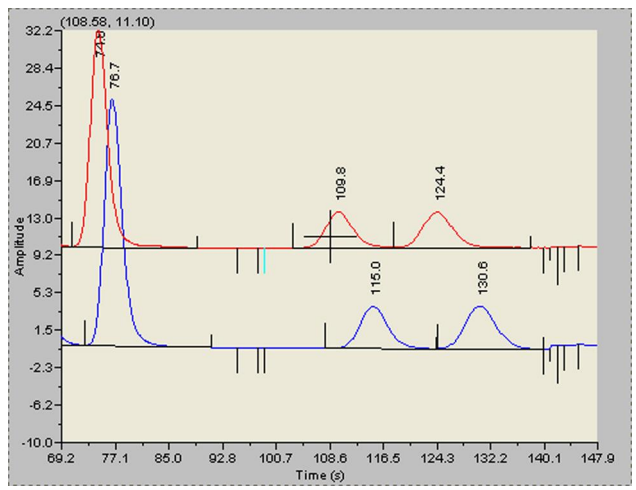

Figure 4 - Retention time shift highlighting the potential for mis-measurement during the next period of operation. The latest chromatogram is shown in blue, and the chromatogram from the last verification test is shown in red.

VERIFICATION REPORTS

As with any events that occur in relation to custody metering locations, it is important that full records of all of the tests performed are kept and are available for all parties use.

The operator of the custody transfer location should provide a written procedure outlining all of the steps to be taken, with space for the metering personnel performing the tests to confirm the steps have been completed and to allow any variations or observations to be noted. The test

procedure must also provide for all of the people performing and/or witnessing the verification test to be noted, and allow room for their signatures.

All of the information collected during the verification test should be stored off site in a secure location. Often all parties of the verification will require complete copies of all of the records created during the procedure. Electronic information such as chromatograms and calibration reports should also be kept onsite for reference during the next verification.