PRODUCTION EQUIPMENT EFFECTS ON ORIFICE MEASUREMENT

Stormy Phillips

Product Manager
Legacy Measurement Solutions
9726 East 42nd Street Suite 219
Tulsa, OK 74126

Introduction

The condition of gas as it presents itself in the pipeline is often not ideal for accurate measurement, by an orifice flow meter. It is the requirement of the American Gas Association (AGA) that the natural gas be in a single phase and with a swirl-free fully developed profile as it passes across the orifice plate to meet the standard of measurement to provide acceptable uncertainty for the flow calculation. Thus it is often necessary to "condition" the gas prior to measurement. Using the basic laws of gases we can control these conditions by altering the temperature, pressure, or component makeup of the gas. Neglecting these conditions will create a poor measurement environment and inaccurate measurement. It is therefore necessary for measurement personnel to be familiar with common production equipment, how that equipment is utilized and what effect it can have on the overall ability for a system to provide accurate measurement.

The following sections of this paper will provide a basic overview of some of the most common production or surface equipment used by the industry today. It briefly looks at how the equipment functions, what situations would commonly warrant such equipment, and the effect the lack of such equipment could have on the overall accuracy of measurement. This is in no way meant to be an inclusive list of equipment or uses for such equipment, but rather a fundamental synopsis to increase the understanding of how and why such equipment would be used.

Separators

Separators are one of the most basic and widely used methods of "conditioning" the gas stream. Most gas in the pipeline is a Heterogeneous mixture, meaning that it consist of multiple parts or phases of different composition. If we could see through the pipe wall the boundaries between these phases would most commonly be visible, because the parts do not chemically react. In order to reach the single part or phase composition necessary for measurement the phases must be separated. This is most easily done with a vessel separator. Not removing these additional parts takes the flow out of AGA guidelines and will result in major distortion of the Vena Contracta giving the measurement a greater uncertainty.

Separators come in several varieties, but the most common are the Horizontal and the Vertical, both of which can separate in 2 phases or 3 phases. These will exploit the qualities of the phases to divide gas from liquid. They can also be used to divide gas from solid material such as sand. An example of three phase separation would be a unit that divides gas from oil and oil from water. There are many combinations that can be utilized, and the same principal is used in liquid only measurement systems. This paper will only cover systems designed for the primary measurement of gas. The ratio of gas to liquid, the recovery value of the liquid, and the velocity of the stream will dictate the set-up of the system, each of which has distinct advantages and disadvantages.

The vessel separator could effectively separate all phases present in the stream without any internal components if it was of sufficient size and the mixture was allowed to stay in the vessel for an extended period of time as to facilitate the natural separation. This is, of course, a completely uneconomical and ineffective way to condition the stream so internals are added to the vessels to expedite this process.

A 2-phase vertical separator has a diverter (plate) located immediately past the inlet. This plate causes a sudden momentum change in the gas flow. This change creates the initial separation of the liquid from vapor. Often referred to as the primary separation section, this diverter uses the dissipation of energy and the force of gravity to push the majority of liquid to the bottom of the vessel. The secondary separation section is in the open space above the diverter (primary section), this space further uses the effect of velocity change (slowing) and the effects of gravity to allow large droplets of liquid to fall out of the gas stream; however, small particles are carried upward by the force of the gas. The bottom of the vessel contains the liquid separation section. This area is often segregated by a baffle of some kind to keep the gas from becoming re-entrained in the liquid and to minimize any turbulence on the liquid surface by the gas flow. A vortex breaker can be used instead of, or in conjunction with, the baffle. This would be placed near the liquid outlet to prevent the development of a vortex during the dump phase (controlled by a liquid level switch) that could cause gas re-entrainment. Near the top of the vessel, before the gas outlet, there is a mist extractor. This is most commonly a wire mesh that allows droplets of liquids to form and fall to the liquid section. This gives most separators of this type the ability to effectively

remove particles 10 microns or larger in size. If there is a chance of wax or paraffin buildup a vane type extractor could be used as the mesh would clog quickly.

For applications in which the liquids are of value and separating them from the water is necessary, a 3 phase vessel can be used. 3 phase separators not only divide the gas from the liquid but also separate the oil from the water; however, separators cannot effectively breakup emulsion (methods for separating emulsion will be discussed later). As in 2 phase separators, the 3 phase vertical separator is used mainly in areas with large gas levels and small amounts of fluid, with the chance of surging. Because longer retention time allows for better oil water separation the fluids in a 3 phase vessel it is most commonly three times that of a standard 2 phase (around 3 minutes).

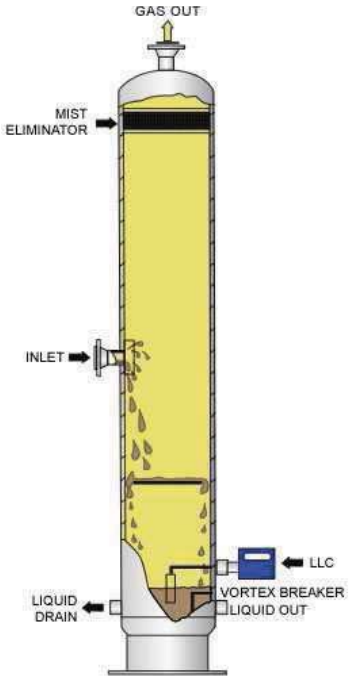

(Figure 1) 2 Phase Vertical Separator
Image courtesy of Smith Industries, Inc.

The internal construction of a 3 phase vessel is similar to that of a 2 phase, with additional baffles and down comers. This allows for the liquid to follow from the primary separation area to below the liquid-gas division line, so it flows out near the oil-water separation line. This keeps the water from having to settle through the oil allowing for more effective separation. Also, a tube is present to allow gas released from the oil to flow back upward toward the mist extractor.

The situation might dictate that a vertical vessel will not effectively separate the mixture and a horizontal vessel might be warranted. Each orientation of the vessel has advantages and disadvantages. The vertical vessel works well in the low gas-oil ratio applications, has a good resistance to re-entrainment (due to the distance between the outlets), has a smaller footprint in areas where space is an issue, is easier to clean, and effectively handles liquid surges. However, they are commonly more expensive to fabricate, and more costly to transport and connect. In a horizontal orientation the roles are reversed, while more difficult to clean and less able to handle surging liquids, a horizontal vessel can handle a much higher oil-gas ratio with greater velocity. They are commonly cheaper and easier to hook up and transport. Also, in the case of liquids that have the potential to foam, a horizontal separator is better suited due to the reduced turbulence in the vessel.

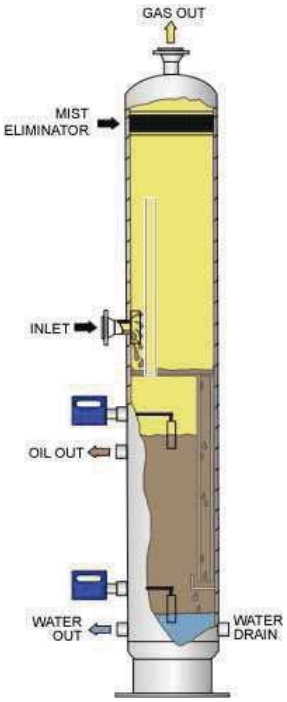

(Figure 2) 3 Phase Vertical Separator
Image courtesy of Smith Industries, Inc.

Horizontal separators are commonly smaller than their vertical counterparts because the liquid inside has two forces acting on it; the horizontal force of the gas stream and the downward force of gravity. As for the internals of the 2 phase horizontal separator, they are very similar to that of the vertical. The main difference is the distance between the outlet for the gas and the outlet for the liquids is very close, most commonly on the far side of the vessel opposite the inlet. The outlet for the gas stream will still have a mist extractor and the outlet for the liquids a vortex breaker. In the 3 phase horizontal vessel we see some marked differences in the internal design. The baffle and down comer system of the vertical vessel is replaced by a spill-over or bucket system. These systems rely on the separation of the oil from the water as it settles in the vessel. Using a baffle in the spill-over system, the far end of the vessel is protected up to the centerline on the separator, thus as the liquid settles in the bottom of the vessel the water will fall out of the oil and the spill-over at the top of the liquid level will only be oil.

Stormy Phillips

Product Manager
Legacy Measurement Solutions
9726 East 42nd Street Suite 219
Tulsa, OK 74126

This leaves oil being extracted from one side of the baffle and water from the other. The bucket system is very similar, only a bucket is created in the center of the vessel that the oil will collect in, and a water only section is created in the far end of the vessel (see figure 3 for details).

Gas scrubbers or drip pots are a very basic 2 phase separator vessel that can be mounted in line to deal with very light liquid or solid mixtures. These are not effective replacements for separators, and should only be used as an additional safety precaution against any entrained liquids or dust that might damage sensitive equipment. These pressure vessels contain a primary separation diverter and a dump valve setup.

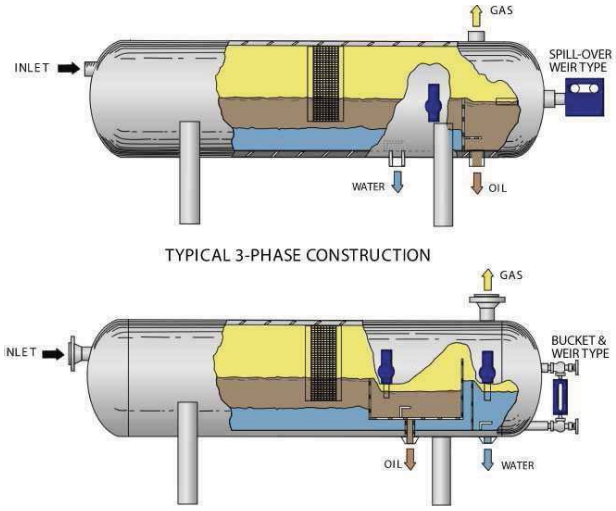

(Figure 3) 3 Phase Horizontal Separator
Image courtesy of Smith Industries, Inc.

The need for separators to help promote an environment of accurate measurement in a system is one of the easiest pieces of production equipment to understand. Their function has a profound effect on the quality of measurement as the flow stream enters the orifice meter run. Even something as seemingly insignificant as the collection of a small amount of dirt around the orifice plate opening can cause a dynamic change in the Vena Contracta that will cause the meter to read low. It is therefore not difficult to see how the collection of larger amounts of sediments or liquids around the plate can have obviously detrimental effects. It is of the upmost importance that technicians or service personnel that deal with these orifice plates take note of such indicators and use that information to promote changes in the system design to regain accurate measurement.

Indirect Heaters

Indirect heaters are a common method in the natural gas industry to heat volatile flows without creating a flash point by using an intermediary liquid to transfer heat. The need for such equipment is routine in the industry due to the formation of hydrates in the gas stream after major pressure drops. Hydrates can be described as snow in the stream that develops when liquid water is condensed in the presence of methane at high pressure and creates ice-like structures at temperatures well above 32 degrees Fahrenheit. This can only happen if free-water is present in the gas stream and the flow temperature is near the hydration formation temperature for the given pressure.

(Figure 4) In-line Gas Scrubber
Image courtesy of Legacy Measurement Solutions

The formation of these hydrates are a major issue in gas measurement as they can lead to frozen valves, block strainers, or create ice buildup on the orifice plate. Also, a situation might occur in which a slug of hydrates move through the pipeline causing impact damage. Among the many issues this can create, an orifice plate

can become bowed or partially blocked affecting the measurement readings. These units are often used in liquid only applications as well, but our focus will be on the primarily gas application.

Some of the most common applications of these units are the heating of the gas stream, prior to regulation, to prevent the formation of frost rings around buried lines downstream of the regulation station. They are also used for heating a high pressure natural gas stream prior to pressure reduction to prevent the formation of water hydrates in the line downstream of the choke or regulation point. Additional common applications of pre-separation gas system heating are to ensure good liquid gas separation, to prevent formation of hydrates, and to supply an amount of heat to the stream that keeps it above the hydrate-forming temperature from wellhead to processing point.

The most common basic design of indirect heaters is fairly constant. They consist of a fire tube (fire box) that provides the heating, a coil tube system that the flow of hydrocarbon that is being heated travels through and a shell that holds the intermediary liquid that the heat is being transfer through. The coils and fire tube are often removable so those pieces can be serviced without affecting the rest of the system. A major advantage of the indirect heating system is that due to the fluid flow being separated from the rest of the system in the coils the necessity for a high-pressure shell is removed. This is a substantial cost savings for the unit.

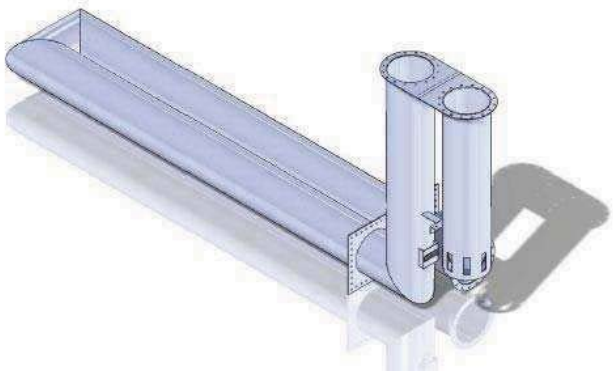

(Figure 5) Indirect Heating Unit Fire Tube
Image courtesy of Legacy Measurement Solutions

The shell of the unit is a steel tube with connections at both ends for the fire tube at one end low in the vessel and the coil at the other, in such a way that the coil will be directly above the fire tube. This will allow the heat to transfer most effectively from the fire tube to the coil. The coil will be of heavy wall material to maintain consistent heat for the product flowing through it. Also, in some cold climate applications the shell might be insulated to reduce the need for extensive burning of the fire tube.

(Figure 6) Indirect Heating Unit Flow Coil
Image courtesy of Legacy Measurement Solutions

The major variation in indirect heating units is the liquid inside the vessel that heat flows through. The most common mediums are water, water-glycol mixture, salt water, and oil. Water bath indirect heaters have a long history of use in the gas industry and can effectively heat flow stream up to 190 degrees Fahrenheit. This 60 to 190 degree range is the optimum for a pure water heater, and water is a very effective medium for heat transfer. If the water is diluted with glycol it will serve as an antifreeze and corrosion inhibitor, but will affect the overall heat transfer coefficient. However, the mixture will raise the boiling point of the bath to near 220 degrees Fahrenheit. If the gas stream needs to be heated to a much greater value mediums like oil can be used, which can heat the process stream to the 250 to 400 degree range. For even higher temperatures a chemical salt bath can be used. These have a very high temperature range (400 to 800 degrees). The very high minimum temperature range is to prevent the salt from re-solidifying.

Indirect heating units allow major pressure regulation while keeping the flow stream out of the hydrate formation temperature, effectively combating the Joule-Thompson effect and other issues that pose this risk in gas systems. These units do this safely by isolating the heating source from the process flow. This simple design is well proven in the field and can be combined with other units to address multiple potential measurement issues in one unit.

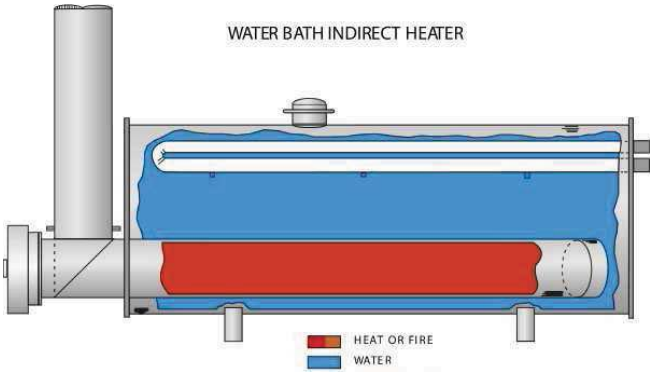

(Figure 7) Water Bath Indirect Heating Unit
Image courtesy of Smith Industries, Inc.

PRODUCTION EQUIPMENT EFFECTS ON ORIFICE MEASUREMENT

Stormy Phillips

Product Manager
Legacy Measurement Solutions
9726 East 42nd Street Suite 219
Tulsa, OK 74126

Production Units

Production units are becoming more common in field systems as an effective means of combining production equipment into a simpler more compact turn-key solution. In the most basic form a production unit is a combination of an indirect heating unit and a separator vessel. This can be a combination of a water bath indirect heater or a water-glycol indirect heater, and a 2 or 3 phase separator in vertical or horizontal orientation. However, one of the more popular applications is the use of a horizontal 3 phase separator stacked (piggy-backed) on the indirect heating unit. This makes a greatly reduced foot print and allows for the ability to enclose and insulate the unit for cold weather applications. These compact units are also easily mounted on structural skids for simple transportation and hook up in the field.

How the package works will vary depending on the exact orientation of the unit, but the basic characteristics are the same. The flow stream will enter the unit into the indirect heating system and then pass through a choke valve. In many systems the choke valve will be placed partially within the indirect heating unit to prevent any possible freezing. After passing through the choke, the stream will enter the separation vessel, separating the gas from the liquids (and possibly the oil from water). Once the stream reaches the separator it will go through the process described in the section above on separation. After the process streams leave the separator they will be measured in the unit. Orifice meter runs are often utilized to measure the gas stream and turbine or positive displacement meter are utilized in the measurement of liquids and water.

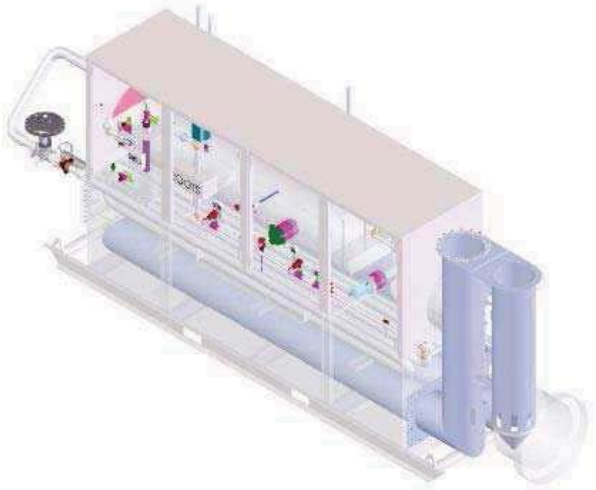

(Figure 8) 3 Phase Enclosed Production Unit
Image courtesy of Legacy Measurement Solutions

With the production unit one can effectively solve the measurement issues of hydrate formation and single phase flow in one unit. This shows a movement in the industry, driven by producers to integrate products into more compact and useable solutions. These units are fabricated to the needs of a specific field and then arrive on site near ready for operation. The reward for this type of forward thinking is more accurate and reliable measurement.

Filter Separators

Filter separators are a specialized separator with removable filter elements designed to separate out particulates smaller than the 10 micron level of a standard separator; barring these removable filters a filter separator functions in much the same way as a standard vessel separator. These units are not designed for large scale separation but rather for the removal of fine dust, mist, and fog, that if present in the gas stream, could create issues for sensitive equipment. Examples of this are before the flow stream enters a compressor station, ahead of high value metering and regulation station to prevent unnecessary wear and measurement inaccuracies, and they are also very vital for the removal of other liquids before the gas stream enters a glycol dehydrator unit. These separators are effective but costly and require a high level of maintenance.

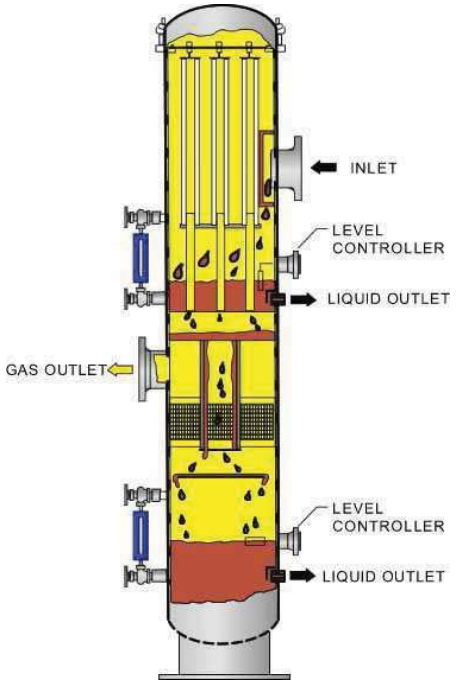

(Figure 9) Vertical Filter Separator
Image courtesy of Smith Industries, Inc.

Heater Treater

If the process stream contains emulsions of liquids, a standard separator will not effectively break up the emulsion. In this application a heater treater can be used to divide the liquids for separation. The upper section of the heater treater receives the well stream flow, which will contain gas, oil, emulsion, and water. In this area of the unit the gas and liquids will be separated in much the same way as a standard separator unit. The flow will be deflected against the vessel wall by the diverter and force the gas and liquids to separate. From here the liquids will collect on a diaphragm plate and flow through a down comer pipe. This pipe will move the liquid below the firebox and a perforated spreader tray, during this process free water is immediately separated from the oil and discharged from the bottom of the treater and through an outside line with an adjustable siphon.

As the oil and emulsion moves through the spreader tray it separates into streamlets and moves upward through the water surrounding the fire tube. This action breaks up a large part of the emulsion. The water removed from the emulsion settles back to the bottom of the vessel to be discharged with the free water. The remaining water in the oil is left to settle by gravity in the center holding section of the treater. The oil, then separated out, moves through a tube in the upper section of the holding area into a storage tank. Any freed gases, now warmed by the process, will move to the upper section of the treater where it will mix with the cool well stream and promote condensation of heavier factions in the gas which are recovered in the oil. The gas will also pass over a mist extractor to remove any entrained liquids.

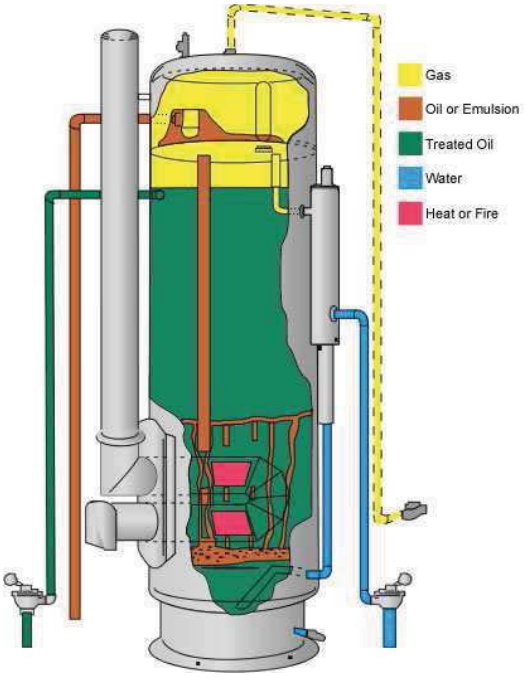

(Figure 10) West Texas Heater Treater
Image courtesy of Smith Industries, Inc.

While this is an effective method for treating loose to moderate emulsions, the effect on measurement is similar to that of the standard separator. Any liquids that are allowed to flow upstream into the metering area can collect or dam up on the orifice plate and distort the Vena Contracta, taking the uncertainty out of the specified range of AGA. Also, if sagging is present in the gauge lines leading the differential pressure chart or flow computer, liquids can collect in them and distort the measurement readings.

Glycol Dehydrator

Glycol Dehydrators are designed to remove water from gas by using liquid glycol (usually triethylene or tetraethylene) as a desiccant. The operation of these units is fairly complex, but in the most basic terms the well stream flows through a tower (bottom to top) in which it interacts with the glycol through a series of trays. The gas flows up and the glycol flows down, and as it flows down becomes more saturated with water from the gas stream. As dried gas flows out of the top of the tower, the glycol, now “rich”, flows from the base of the tower through a pump and into a heat exchanger. As the glycol is pumped through the heat exchanger and a reboiler, the water vapor is removed and the glycol is re-concentrated to repeat the process.

PRODUCTION EQUIPMENT EFFECTS ON ORIFICE MEASUREMENT

Stormy Phillips

Product Manager
Legacy Measurement Solutions
9726 East 42nd Street Suite 219
Tulsa, OK 74126

This is an oversimplification of a complex process, but the reasons for dehydrating the gas flow fall into three basic categories. First, any water vapor in the line can damage and corrode measurement equipment. Any equipment that extends into the process flow (including the orifice plate) will collect liquids and begin the corrosion process. Next, water vapor in the line can lead to the formation of hydrates, which as described earlier can not only collect on and diminish the effectiveness of equipment, but can also collect and plug the flow. Finally, if water vapor collects to such a degree in liquid form as to create a stream at the base of a line, the overall capacity of the line will be affected. Any of these possible issues can lead to major variances on measurement, and should not be overlooked.

Conclusion

It is important for all those responsible for measurement to understand that the ideal gas conditions that were used to create standards of AGA do not commonly exist in the field. It is the responsibility of anyone who strives for accurate measurement to understand the equipment necessary to "condition" the gas flow to create the ideal measurement environment. Each of these pieces of equipment, if utilized in the proper environment, can and will contribute to accurate and accountable measurement. This accountability should be the ultimate goal of everyone in the industry today. It is therefore necessary to understand each of these units, how they function, what they can do to "condition" the gas flow, and what effect that will have on measurement accuracy.

References

American Gas Association. *A.G.A. Gas Measurement Manual (Revised) Part Nine Design of Meter and Regulator Stations.* Arlington: American Gas Association, 1988. Print.

American Gas Association. *A.G.A. Gas Measurement Manual Orifice Meters Part 3.0.* Arlington: American Gas Association, 1990. Print.

American Gas Association Petroleum Institute. *AGA Report No. 3 Orifice Metering of Natural Gas and Other Related Hydrocarbon Fluids Part 2 Specification and Installation Requirements.* Washington DC: American Gas Association, 2000. Print.

Miller, R.W. *Flow Measurement Engineering Handbook*. New York: McGraw, 1983. Print.

Pulley, David. "Production Equipment Effects on Gas Measurement." American School of Gas Measurement Technology 2011 Houston, TX.

Raymond, Martin and William Leffler. *Oil and Gas Production in Nontechnical Language*. Tulsa: Pennwell, 2006. Print.

Images courtesy of Smith Industries Inc and Legacy Measurement Solutions.